GENERAL DETAIL

GROUND FLOOR AREA	— 42	sqm
SITE AREA	— 1115	sqm
WATER TANK SLAB AREA	— 10.5	sqm
CANOPY AREA	— 207.6	sqm
INTERLOCK PAVING AREA	— 1020	sqm

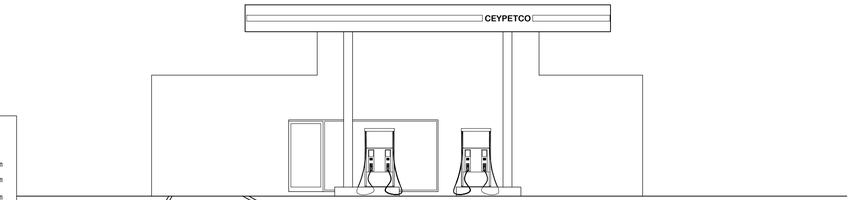

FRONT ELEVATION

scale 1 : 100

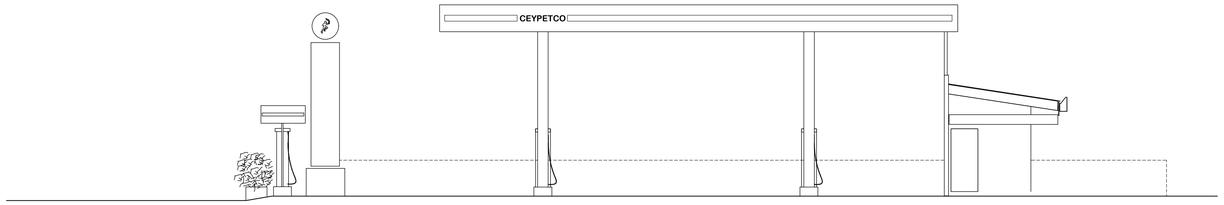

SIDE ELEVATION

scale 1 : 100

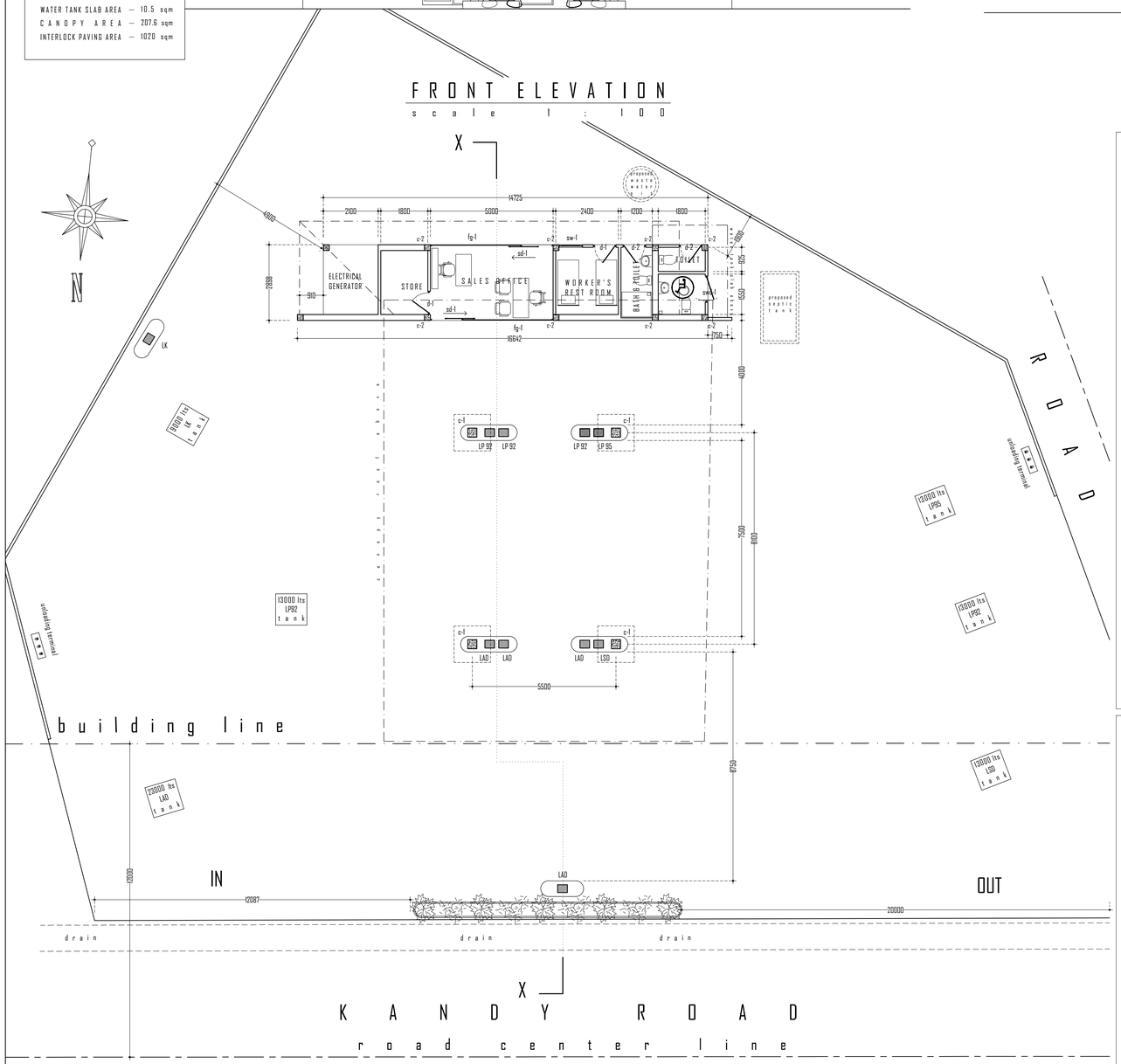

GROUND FLOOR PLAN

scale 1 : 100

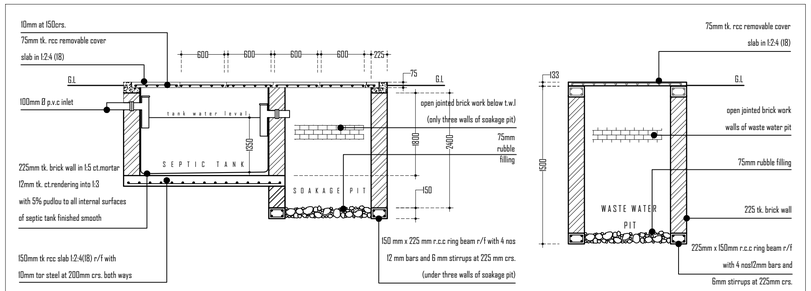

SECTION

SECTION

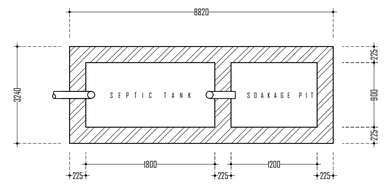

LAYOUT PLAN

DETAIL OF SEPTIC TANK & SOAKAGE PIT

scale - 1 : 25

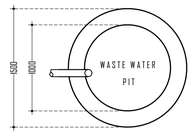

LAYOUT PLAN

DETAIL OF WASTE WATER PIT

scale - 1 : 25

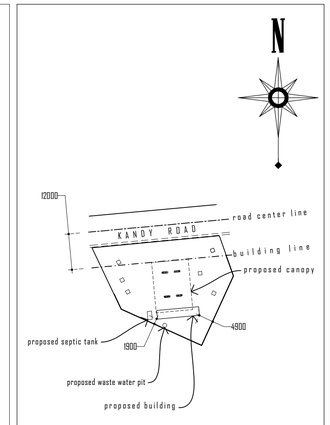

PROPOSED SITE PLAN

SCALE - 1 : 25

TYPE	SIZE	DESCRIPTION	NOS
SD-1	1200 x 2400	AL. FRAMED GLAZED PANELED SLIDING DOOR	02
D - 1	900 x 2100	AL. FRAMED AL. PANELED DOOR	02
D - 2	900 x 2100	AL. FRAMED AL. LOUVER PANELED DOOR FANLIGHT ON TOP	02
SWD-1	1200 x 2100	AL. FRAMED AL. PANELED SWING DOOR & FANLIGHT ON TOP	01
SW-1	1200 x 1200	AL. FRAMED AL. SLIDING WINDOW	01
FG-1	3800 x 2400	AL. FRAMED FIXED GLAZED PANELED WINDOW	02

SCHEDULE OF DOORS & WINDOWS

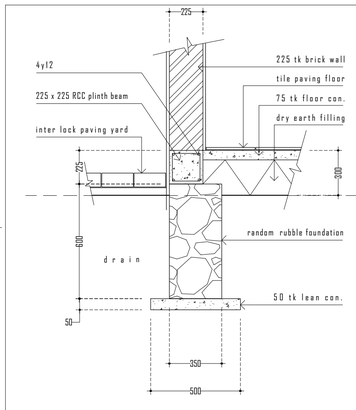

DETAIL OF WALL FOUNDATION

scale - 1 : 25

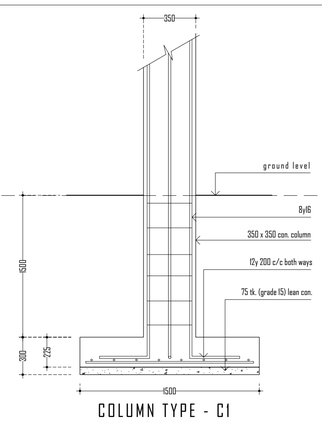

COLUMN TYPE - C1

DETAIL OF RCC COLUMN STUD FOUNDATION

scale - 1 : 25

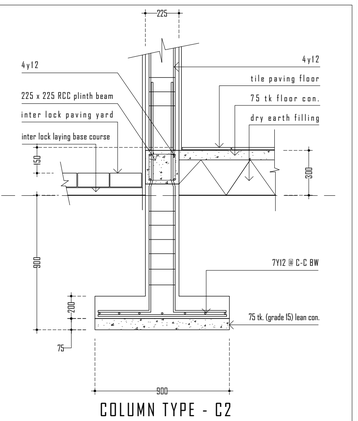

COLUMN TYPE - C2

DETAIL OF RCC COLUMN STUD FOUNDATION

scale - 1 : 25

Engineering & Premises Manager	checked by	applicant	chartered engineer	chartered architect	COUNCIL

17 - AUGUST - 2026

Printed Scale - 1 : 100 Sheet - A1

Drawing No - ceypetco/eng/0648 (A)

ARCHITECTURAL DESIGN	ENGINEERING DESIGN	PROJECT ENGINEER
ATHULGAMA	GANGA KUMARI	GAYAN WEJEKOON

PROJECT

MODIFICATION OF EXISTING LANKA FUEL FILLING STATION MPCS (AC NO 100634) AT KANDY ROAD, MAHIYANGANAYA.

CEYLON PETROLEUM CORPORATION

ENGINEERING & PREMISES Dept.

NO-609, DR. DENISTER SILVA MAWATA, COLOMBO - 09. T.P. NO - 0117296100

EMAIL - engineering@ceypetco.gov.lk